SH700 SHOWERS - Solid Phenolic

(Handicap 36" x 48")

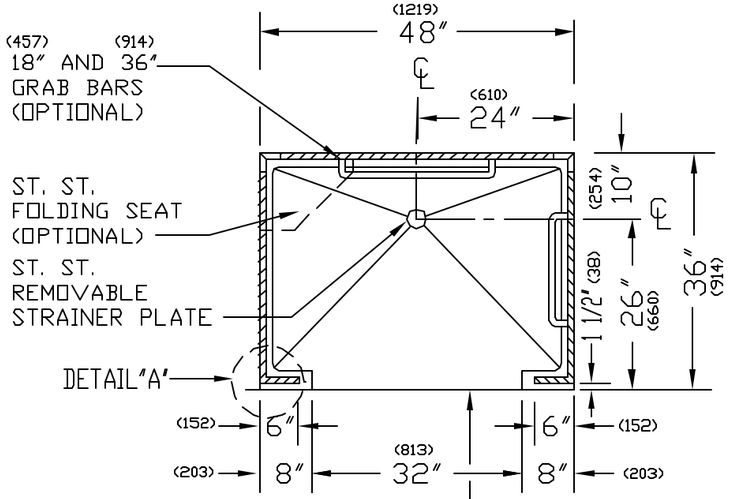

SECTION "A-A"

ENTRANCE FLUSH WITH FINISHED FLOOR

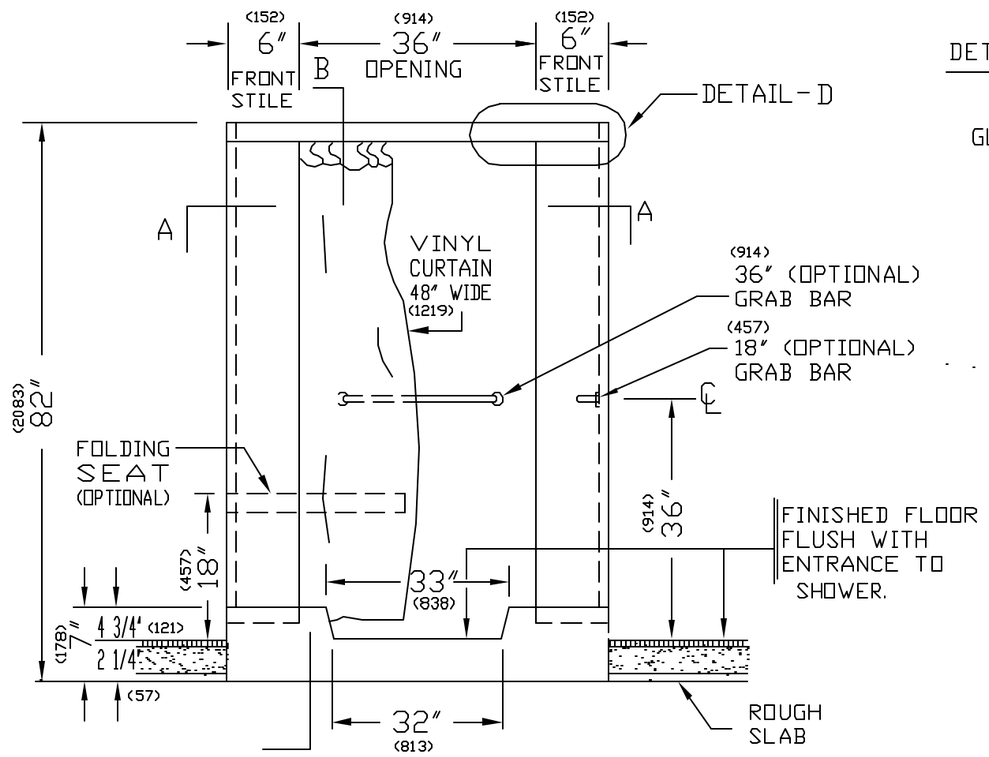

FRONT ELEVATION

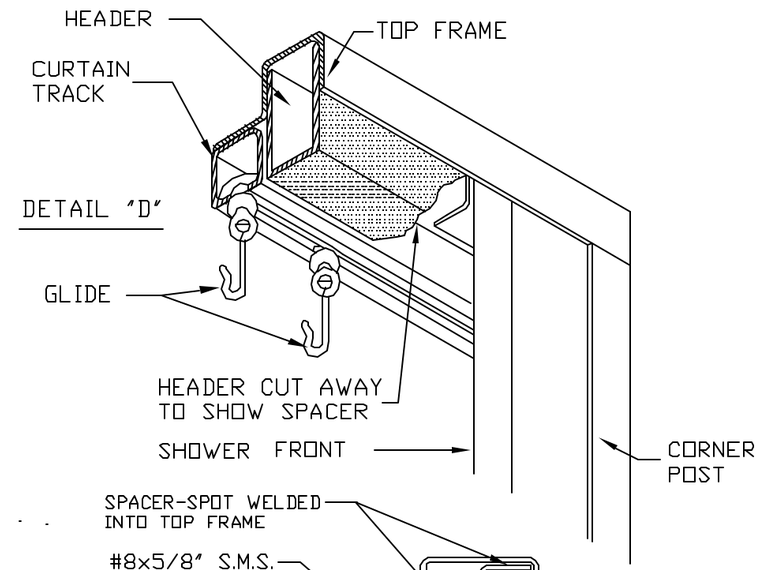

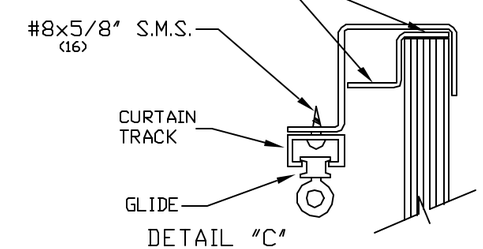

DETAIL "C"

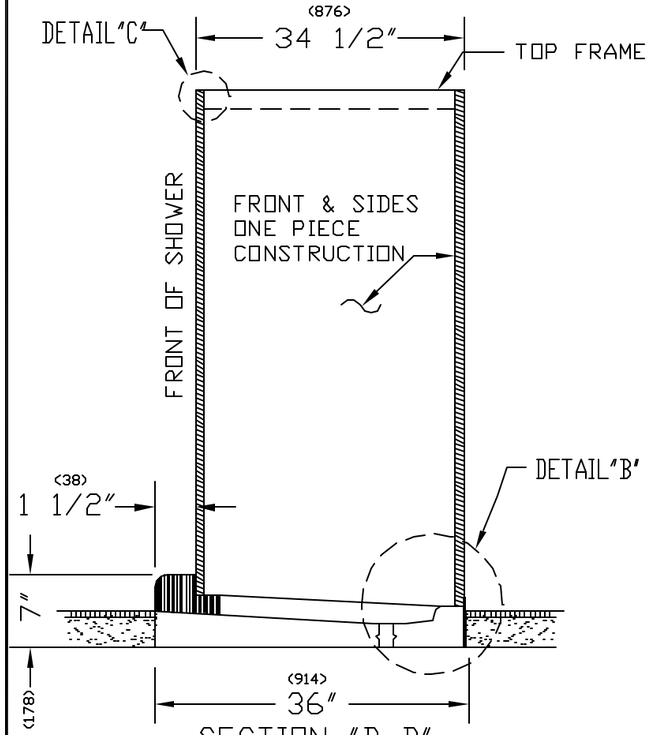

SECTION "B-B"

RECEPTER MUST BE SET 2 1/4" (57) BELOW FINISHED TILE FLOOR LINE

DIMENSIONS IN BRACKETS "( )" = MILLIMETERS

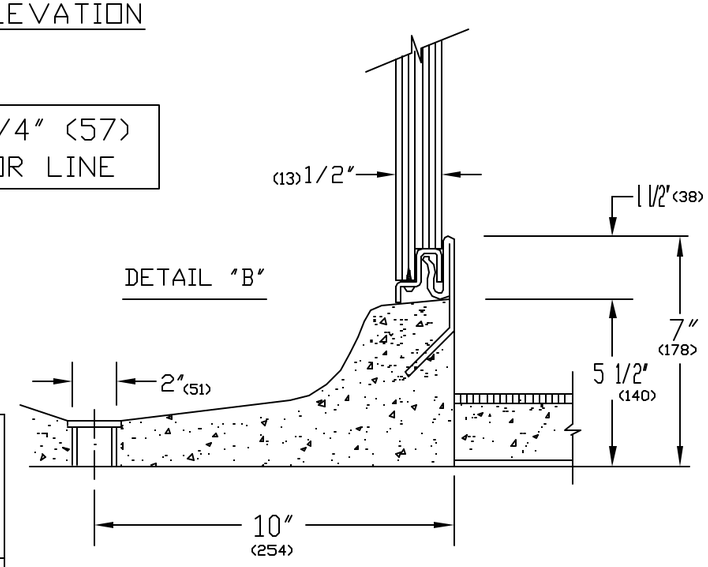

DETAIL "B"

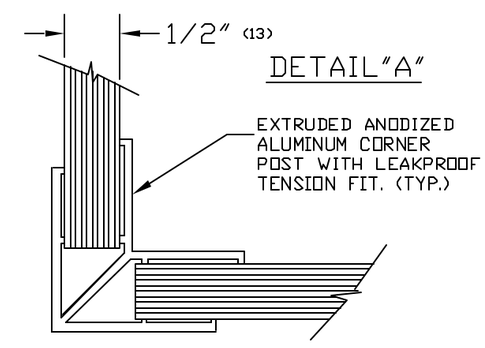

DETAIL "A"

SPECIFICATION

1. SHOWER WALLS TO BE OF PHENOLIC CORE. ALL PANELS INTERLOCK INTO LEAKPROOF ASSEMBLIES.
2. RECEPTORS TO BE PRECAST TERRAZZO, WITH WHITE & BLACK MARBLE CHIPS, GROUND SMOOTH WITH NON-SLIP SURFACE. RECEPTORS TO HAVE INTEGRAL DRAIN AND REMOVABLE STAINLESS STEEL STRAINER, 2" (51) DRAIN CONNECTION BY PLUMBER.
3. ACCESSSORIES TO INCLUDE CHROME-PLATED CAST SOAP DISH, CURTAIN AND GLIDES.
4. SHOWER HEAD AND MAIN VALVES BY OTHERS.

METPAR CORP.
95 State Street, Westbury, L I, NY 11590
Tel: 516-333-2600 ~ Fax: 516-333-2618 ~ www.metpar.com ~ Service@Metpar.com

File: SH700PH2.DWG	SH700 HC PH	DATE: 2/13/02